10. Transfer Case and Extension Case Assembly

A: REMOVAL

1) Remove the manual transmission assembly from the vehicle. <Ref. to 5MT-25, REMOVAL, Manual Transmission Assembly.>
2) Remove the back-up light switch and the neutral position switch. <Ref. to 5MT-35, REMOVAL, Switches and Harness.>
3) Remove the transfer case together with the extension case assembly.

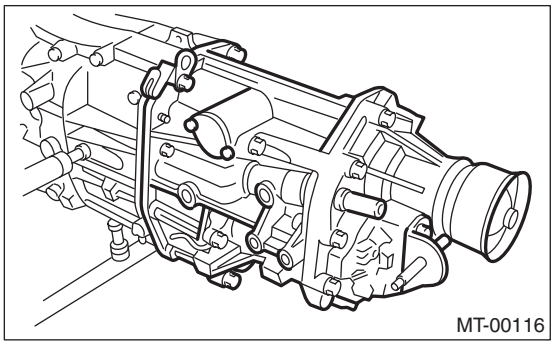

4) Remove the shifter arm.
5) Remove the extension case assembly.

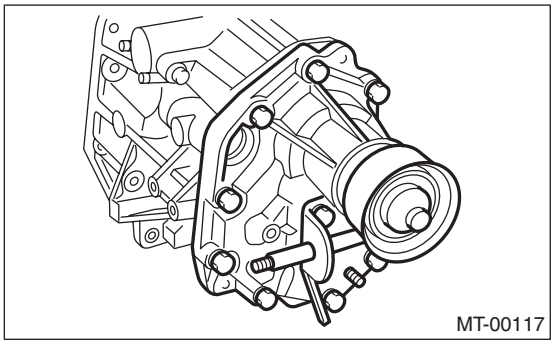

B: INSTALLATION

1) Install the center differential and transfer driven gear into the transfer case.

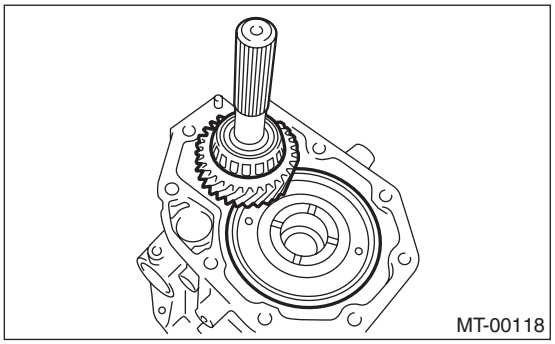

2) Remove the bearing outer race from the extension case.

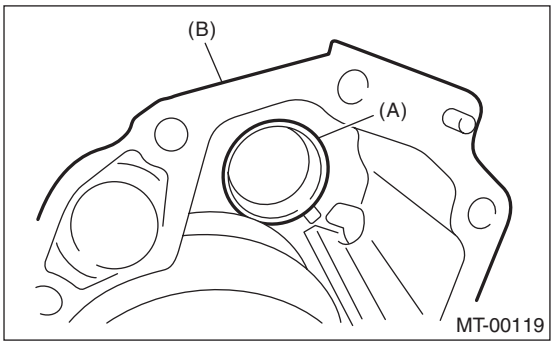

(A) Bearing outer race
(B) Extension case

3) While holding the bearing outer race horizontally, rotate the driven shaft for ten turns.
4) Measure the height “W” between transfer case and taper roller bearing on the transfer driven gear.

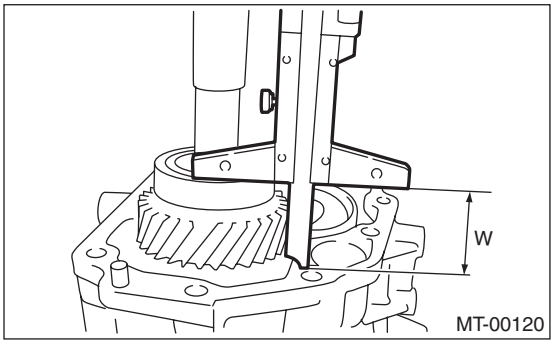

5) Measure depth “X” on bearing insertion part of the extension case.

NOTE:
Measure with bearing outer race and thrust washer removed.

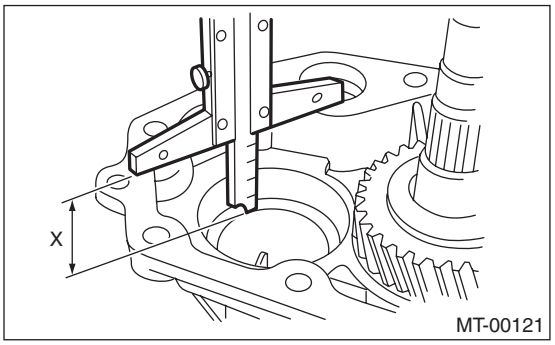

6) Calculate the thrust washer thickness “t” using following calculation.
t = X – W + (0.15 — 0.20 mm (0.006 — 0.008 in))

7) Select the washer with the nearest value in the following table.

Taper roller bearing preload (standard protrusion) :
0.15 — 0.20 mm (0.006 — 0.008 in)

NOTE:
Always adjust to the specified range of preload.

Thrust washer (50 × 61 × t)	
Part No.	Thickness mm (in)
803050060	0.50 (0.0197)
803050061	0.55 (0.0217)
803050062	0.60 (0.0236)
803050063	0.65 (0.0256)
803050064	0.70 (0.0276)
803050065	0.75 (0.0295)
803050066	0.80 (0.0315)
803050067	0.85 (0.0335)
803050068	0.90 (0.0354)
803050069	0.95 (0.0374)
803050070	1.00 (0.0394)
803050071	1.05 (0.0413)
803050072	1.10 (0.0433)
803050073	1.15 (0.0453)
803050074	1.20 (0.0472)
803050075	1.25 (0.0492)
803050076	1.30 (0.0512)
803050077	1.35 (0.0531)
803050078	1.40 (0.0551)
803050079	1.45 (0.0571)

8) Fit the thrust washers on the transfer drive shaft.
9) Install the bearing outer race into the extension case.
10) Measure the depth “S” between transfer case and center differential.
ST 398643600 GAUGE

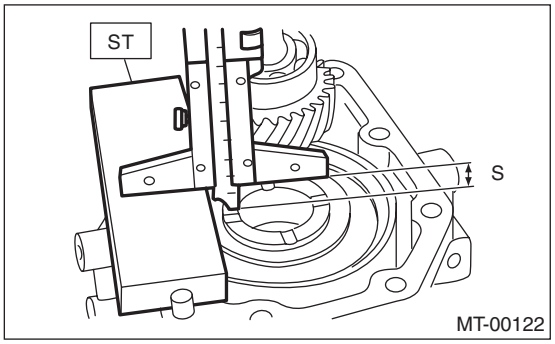

11) Measure the depth “T” between extension case and transfer drive gear.
ST 398643600 GAUGE

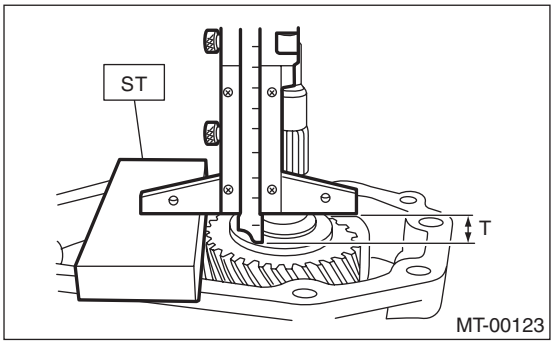

NOTE:
ST thickness [15 mm (0.59 in)]
12) Calculate the thrust washer “U” using the following calculation:
U = S + T – 30 mm (1.18 in) [Thickness of ST]
13) Select a suitable washer in the following table.

Standard clearance:
0.15 — 0.35 mm (0.0059 — 0.0138 in)

Thrust washer	
Part No.	Thickness mm (in)
803036050	0.9 (0.035)
803036054	1.0 (0.039)
803036051	1.1 (0.043)
803036055	1.2 (0.047)
803036052	1.3 (0.051)
803036056	1.4 (0.055)
803036053	1.5 (0.059)
803036057	1.6 (0.063)
803036058	1.7 (0.067)

14) Fit the thrust washer onto the center differential.
15) Apply a proper amount of liquid gasket to the transfer case mating surface.

Liquid gasket:
THREE BOND 1215 (Part No. 004403007) or equivalent

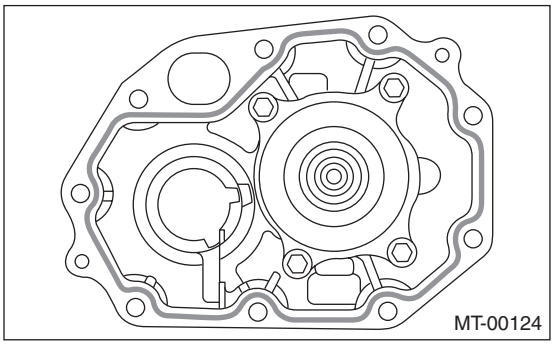

16) Install the extension assembly into the transfer case.

Tightening torque:
40 N·m (4.1 kgf-m, 29.7 ft-lb)

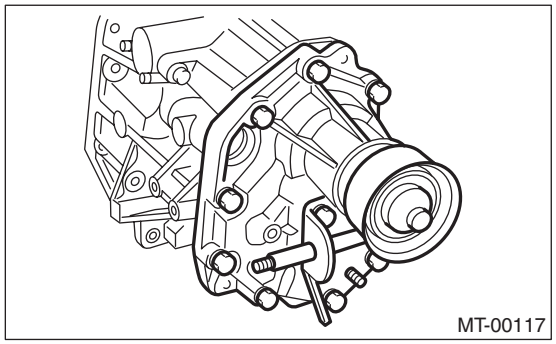

17) Attach the shifter arm to transfer case.

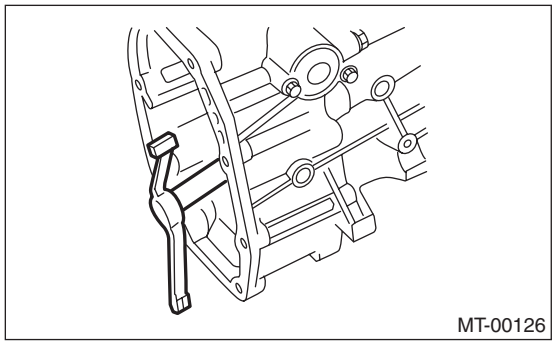

18) Hang the shifter arm on 3rd-4th fork rod.

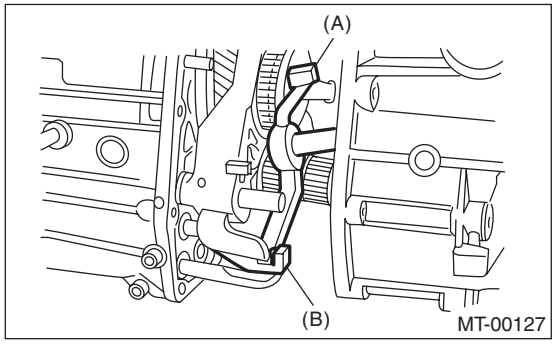

(A) Shifter arm
(B) 3rd-4th fork rod

19) Install the extension case assembly along with the transfer case to the transmission case.

Tightening torque:
24.5 N·m (2.5 kgf-m, 18.1 ft-lb)

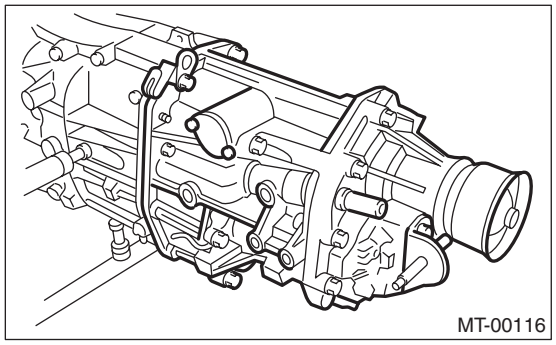

C: DISASSEMBLY

1. TRANSFER CASE

1) Remove the reverse check sleeve assembly. <Ref. to 5MT-48, REMOVAL, Reverse Check Sleeve.>
2) Remove the oil guide.

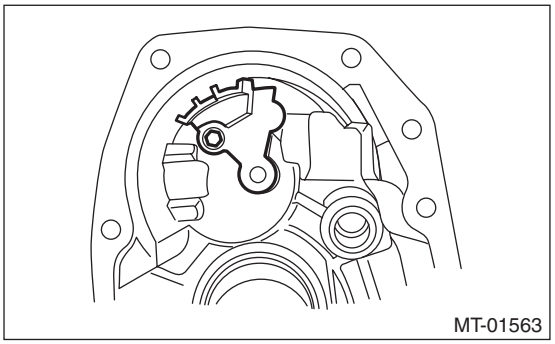

2. EXTENSION CASE

1) Remove the transfer drive gear assembly. <Ref. to 5MT-43, REMOVAL, Transfer Drive Gear.>
2) Remove the shift bracket.

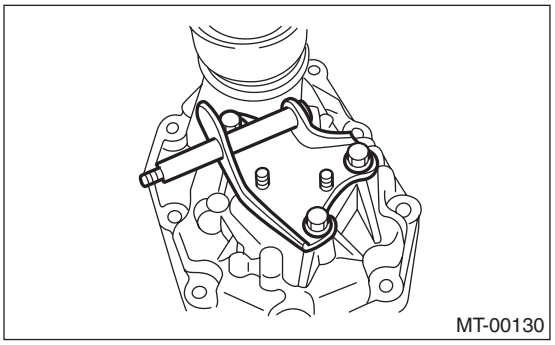

3) Remove the oil seal from the extension case. <Ref. to 5MT-33, Oil Seal.>

D: ASSEMBLY

1. EXTENSION CASE

1) Using the ST, install the oil seal to the extension case. <Ref. to 5MT-33, Oil Seal.>

NOTE:
Use a new oil seal.

2) Install the shift bracket to extension case.

Tightening torque:
24.5 N·m (2.5 kgf-m, 18.1 ft-lb)

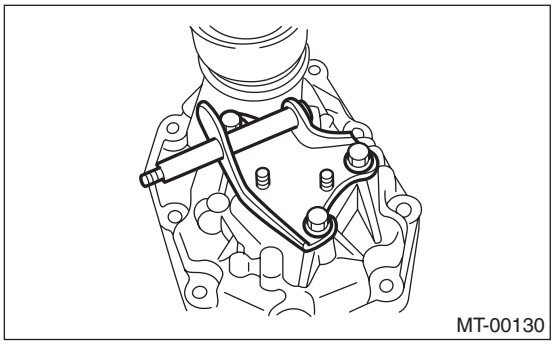

3) Install the transfer drive gear to the extension case. <Ref. to 5MT-43, INSTALLATION, Transfer Drive Gear.>

2. TRANSFER CASE

1) Install the oil guide to the transfer case.

Tightening torque:
6.4 N·m (0.65 kgf-m, 4.7 ft-lb)

NOTE:
Use a new installing bolt.

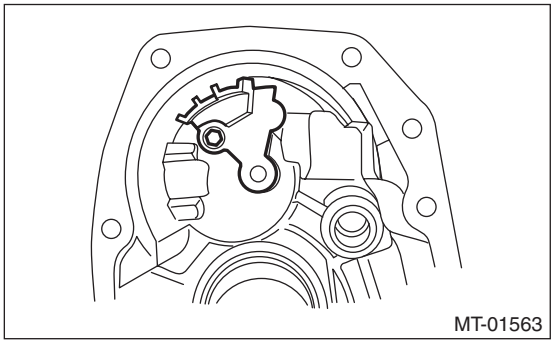

2) Install the reverse check sleeve assembly to the transfer case. <Ref. to 5MT-48, INSTALLATION, Reverse Check Sleeve.>